ProSix C-series

Efficiency and precision you can rely on

EPSON®
EXCEED YOUR VISION

A robot for every application

Introducing the Epson ProSix C-series: six-axis robots with the range and load capacity for every application – and precision as standard. With a large range, you'll find one perfectly suited to your needs.

Whatever your industry, the Epson ProSix C-series robots are equal to the challenge. Marked out by their slim, compact design, they can work with maximum precision even at high speeds, thanks to our QMEMS® sensor technology.

ProSix C4 series – with 4kg payload

ProSix C8 series – with 8kg payload

Epson ProSix C4

Range: 600mm
Applications include: identification, assembly, soldering and welding, measurement, testing and inspection.

Epson ProSix C4L

Range: 900mm
Applications include: machine loading and unloading, packing and order picking, assembly, soldering and welding, palletising.

Epson ProSix C8

Range: 710mm
Applications include: identification, packaging and order picking, assembly, soldering and welding,measurement, testing and inspection.

Epson ProSix C-series

With a variety of load capacity and different ranges, the series is exceptionally versatile. The robots can be put to use in all kinds of sectors and industries including: automotive, electronics, machine tools, medical devices, semiconductor, foodstuffs, and plastics and metal.

ProSix C12 - with 12kg payload

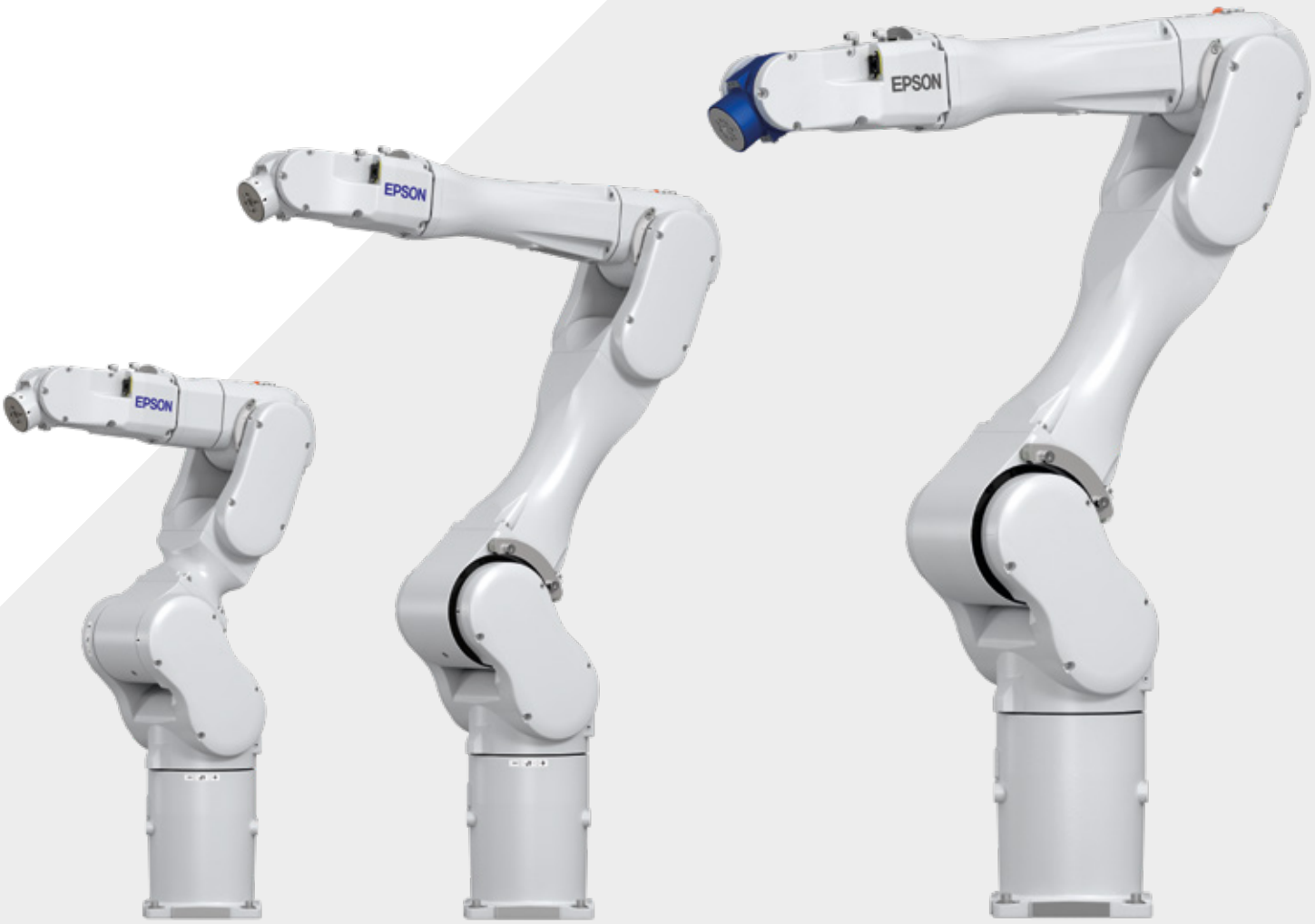

Epson ProSix C8L

Range: 900mm
Applications include:
machine loading and unloading, identification, packaging and order picking, assembly, soldering and welding, palletising.

Epson ProSix C8XL

Range: 1,400mm
Applications include: machine loading and unloading, parts picking, packaging and order picking, soldering and welding, palletising.

Epson ProSix C12XL

Range: 1,400mm
Applications include: machine loading and unloading, parts picking, packaging and order picking, soldering and welding, palletising.

Fast, sleek, precise operation

If you're looking for a robot that can work in confined spaces, often in conjunction with other robots, and is accurate even when time is short, you're looking in the right place.

The Epson C-series can help your system reach its full potential. The six-axis machines work at high speeds with precise path behaviour, all in an ultra-slim body. The variety of assembly options gives you all the flexibility you need.

Impressive team player

You can easily combine your Epson six-axis robot with other members of the family, such as SCARA robots, the Epson Spider and other peripheral devices. Although they perform different tasks, robots speak via Epson RC700-A controller one language - Epson RC+.

Strong and silent

Epson QMEMS® sensor technology and Epson Smart Motion Motor Management.

These fast, powerful, six-axis robots features revolutionary Motor Management from Epson and, for the first time, QMEMS® technology, which uses high-precision motion sensors.

QMEMS®-equipped robots enable exceptionally quiet and vibration-free travel, even under load and at high speeds. The benefit of this is improved production throughput and consistently stable quality in all assembly tasks.

One for all: Epson RC700-A controller

Extremely compact, outstandingly economical and powerful, the Epson RC700-A controller can communicate with fieldbus systems and can also be used to connect additional robots sensors, actuators and conveyors.

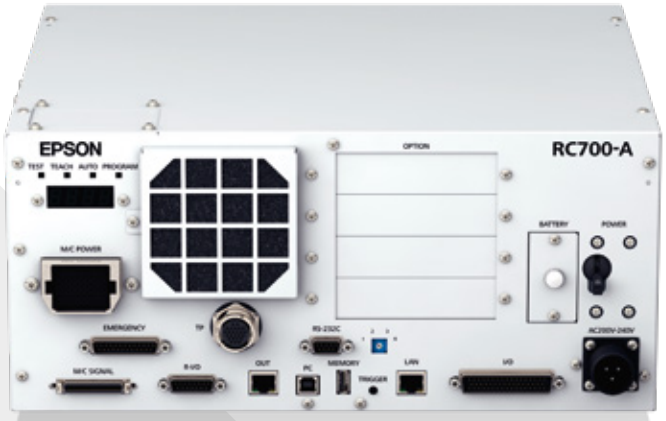

Saves space and reduces cycle times thanks to the possibilities for the axes 2 and 3 to rollover.

Increased freedom of movement thanks to special joint geometry, which enables axis five to rotate at a ± 135° angle. Fewer interference contours, slim design, internal supply lines for maximum system reliability, simple commissioning and reduced maintenance costs.

Integrated concept, with simple networking

The Epson RC700-A Controller is compact, economical and powerful. It communicates with fieldbus systems, and can also be connected to additional robots sensors, actuators, and conveyors.

Smooth action in force-guided operations with optional Epson Force Sensors

Teach Pendant TP3

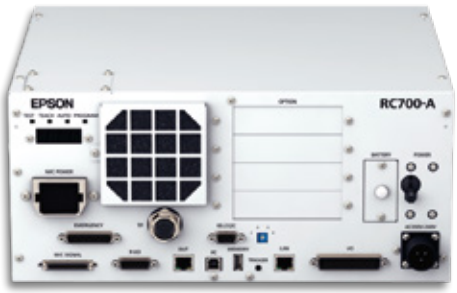

Optional I/O cards

Optional fieldbus, digital and analog I/O cards.

Euromap67 Option

To provide interchangeability between injection moulding machine and the handling robot.

EtherNet/IP EtherCAT PROFINET PROFIBUS DeviceNet CC-Link

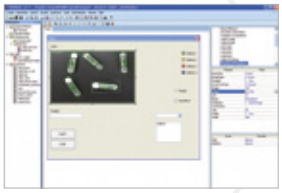

GUI development

Integrated image processing with Epson Compact Vision for

Measurement
Quality inspection
Error detection
Parts positioning
Tracking on conveyors

Epson RC+ programming environment

RC+ Integrated Simulator.

The Vision feeder

To separate or singulate the parts for the robot to pick up.

High-speed conveyor tracking

Enables high-precision synchronisation with moving objects.

Epson ProSix C4

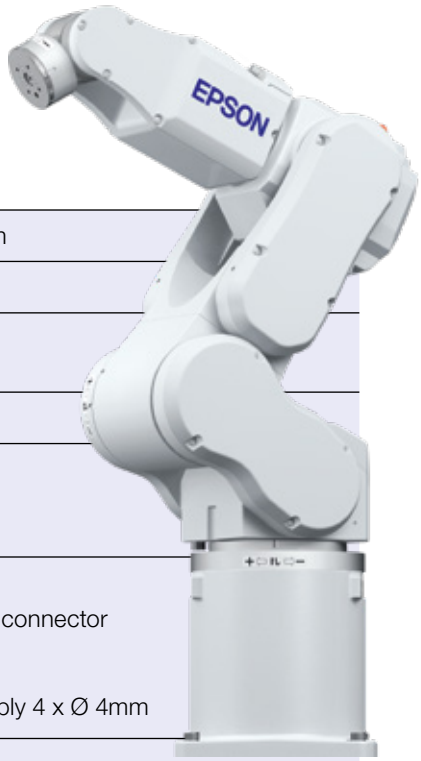

	C4-A601S
Design	Vertical articulated arm
Load capacity	4 / 5* kg
Range	P point** 600mm max. 665mm
Repeatability	+/−0,02mm
Permissible moment of inertia	J4 0.15 kg * m^2 J5 0.15 kg * m^2 J6 0.10 kg * m^2
User cabling	**Electrical** Connection for 1 x 9-pin D-Sub connector **Pneumatic** Connectors for compressed air supply 4 x Ø 4mm
Weight	27 kg
Controllers	RC700-A, RC700DU-A
Installation	Floor/ceiling each also recessed
Ambient condition	**Cleanroom class (option)** ISO3 & ESD **Protection class** IP4O

J1 = Axis 1
J2 = Axis 2
J3 = Axis 3
J4 = Axis 4
J5 = Axis 5
J6 = Axis 6

*** Possible under specific conditions** (see manual)

****P point:** Intersection point of rotation centres of axes 4, 5 and 6

Package

Epson robots and controller

Epson RC+ program CD including simulation software

2x mounting bracket sets for the robot controller

3m power and signal cable

3m power cable for the robot controller

Emergency stop plug

Plug for standard inputs and outputs

Plug set for user cabling

2x air connection sets
(each with 4x straight and 4x 90° angled)

CD manuals

Installation/safety manual

Manipulator options

Extended power and signal cable (5m / 10m / 20m)

Brake release unit

Mounting bracket

Installation

The Epson ProSix C4 and ProSix C4L six-axis robots have flexible installation options which work for a wide range of applications.

In addition to floor and ceiling installation, recessed installation is also possible. In this case the base of the robot is not required and the cable conduit is hidden, allowing you to reduce the height of your production cell.

Side view

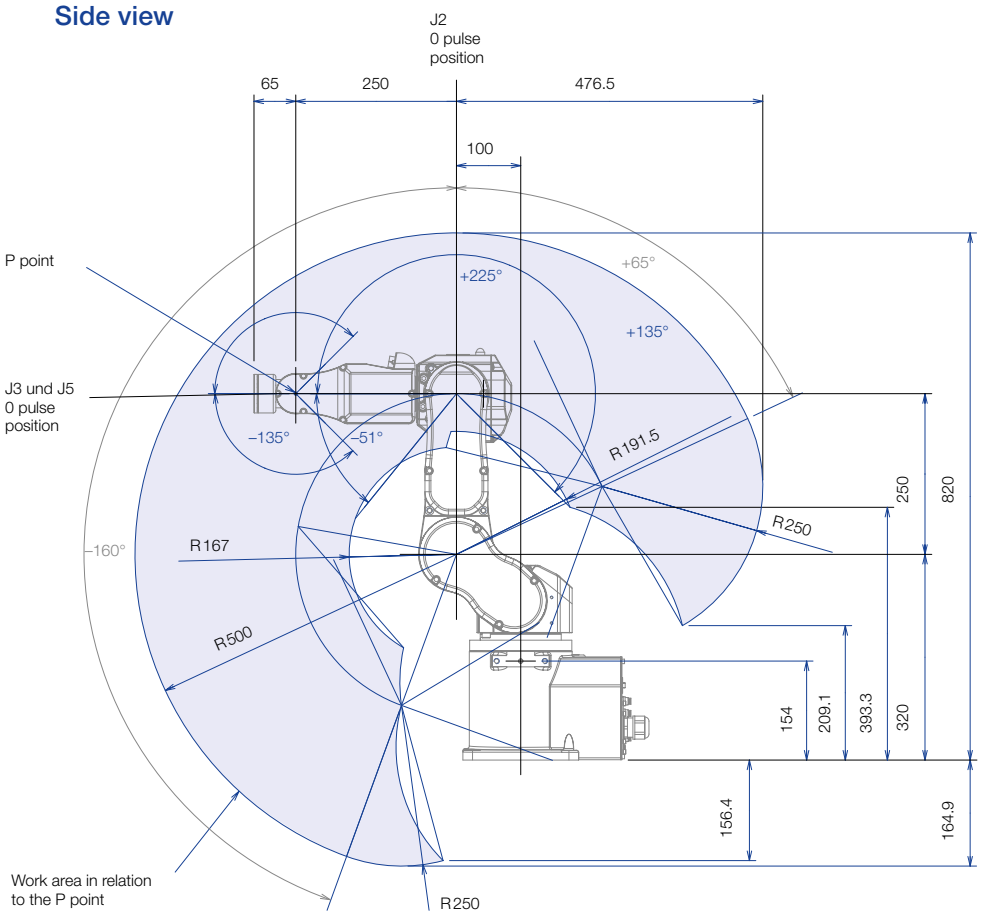

Flange

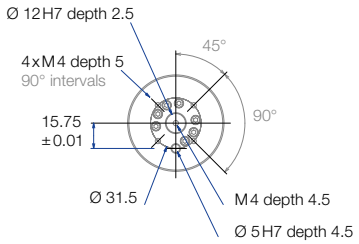

Front view

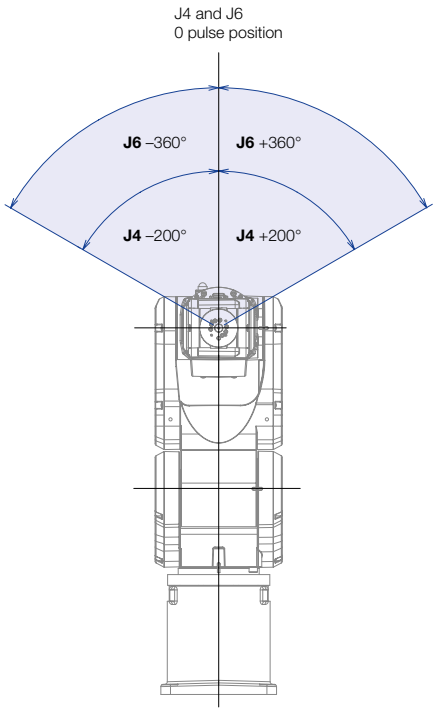

Top view

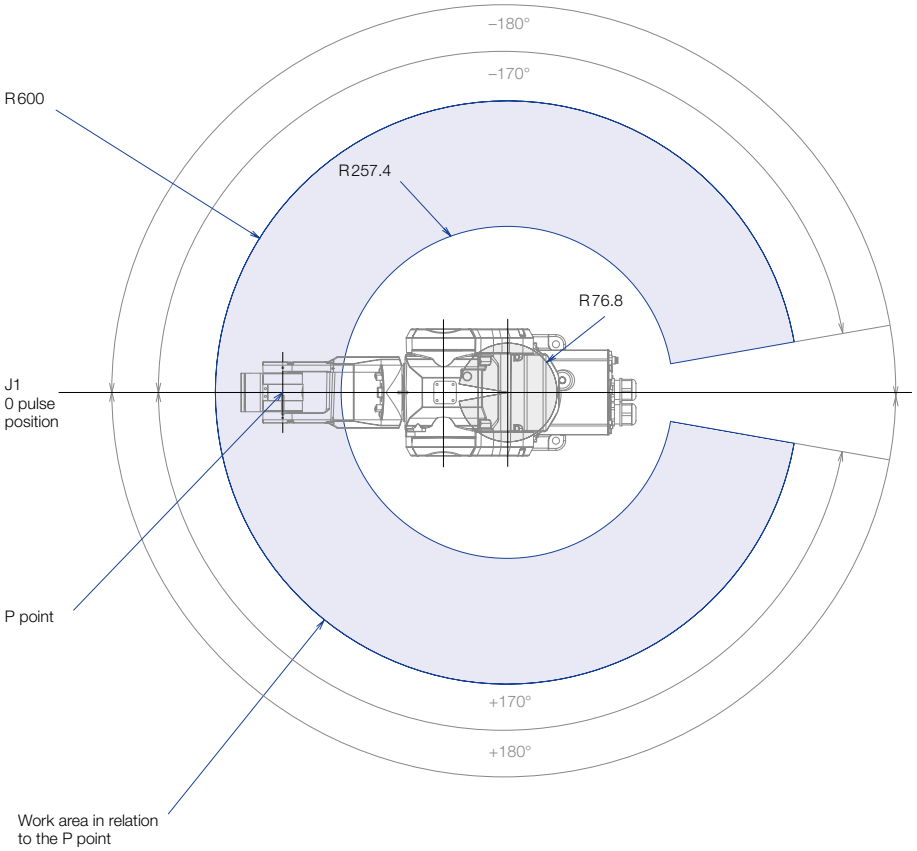

Epson ProSix C4L

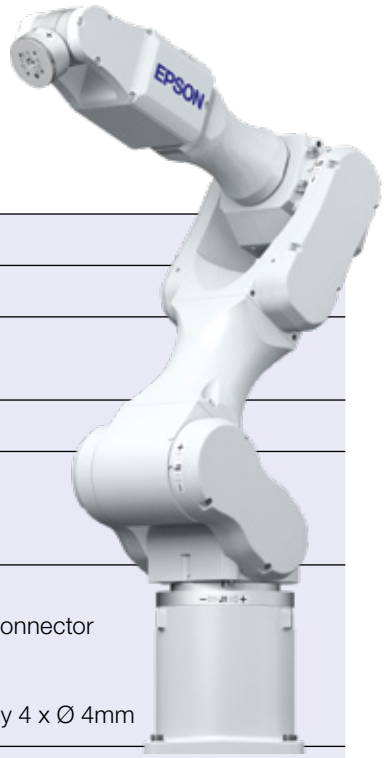

	C4-A901S
Design	Vertical articulated arm
Load capacity	4/5* kg
Range	P point** 900mm max. 965mm
Repeatability	+/−0,03mm
Permissible moment of inertia	J4 0.15 kg * m^2 J5 0.15 kg * m^2 J6 0.10 kg * m^2
User cabling	**Electrical** Connection for 1 x 9-pin D-Sub connector **Pneumatic** Connectors for compressed air supply 4 x Ø 4mm
Weight	29 kg
Controllers	RC700-A, RC700DU-A
Installation	Floor/ceiling each also recessed
Ambient condition	**Cleanroom class (option)** ISO3 & ESD **Protection class** IP40

J1 = Axis 1
J2 = Axis 2
J3 = Axis 3
J4 = Axis 4
J5 = Axis 5
J6 = Axis 6

*** Possible under specific conditions** (see manual)

****P point:** Intersection point of rotation centres of axes 4, 5 and 6

Package

Epson robots and controller

Epson RC+ program CD including simulation software

2x mounting bracket sets for the robot controller

3m motor and signal cable

3m motor cable for the robot controller

Emergency stop plug

Plug for standard inputs and outputs

Plug set for user cabling

2x air connection sets
(each with 4x straight and 4x 90° angled)

Manuals on CD

Installation/safety manual

Manipulator options

Extended power and signal cable (5m / 10m / 20m)

Brake release unit

Mounting bracket

Installation

The Epson ProSix C4 and ProSix C4L six-axis robots have flexible installation options that work for a wide range of applications.

In addition to floor and ceiling installation, recessed installation is also possible. In this case the base of the robot is not required and the cable conduit is hidden, allowing you to reduce the height of your production cell.

Side view

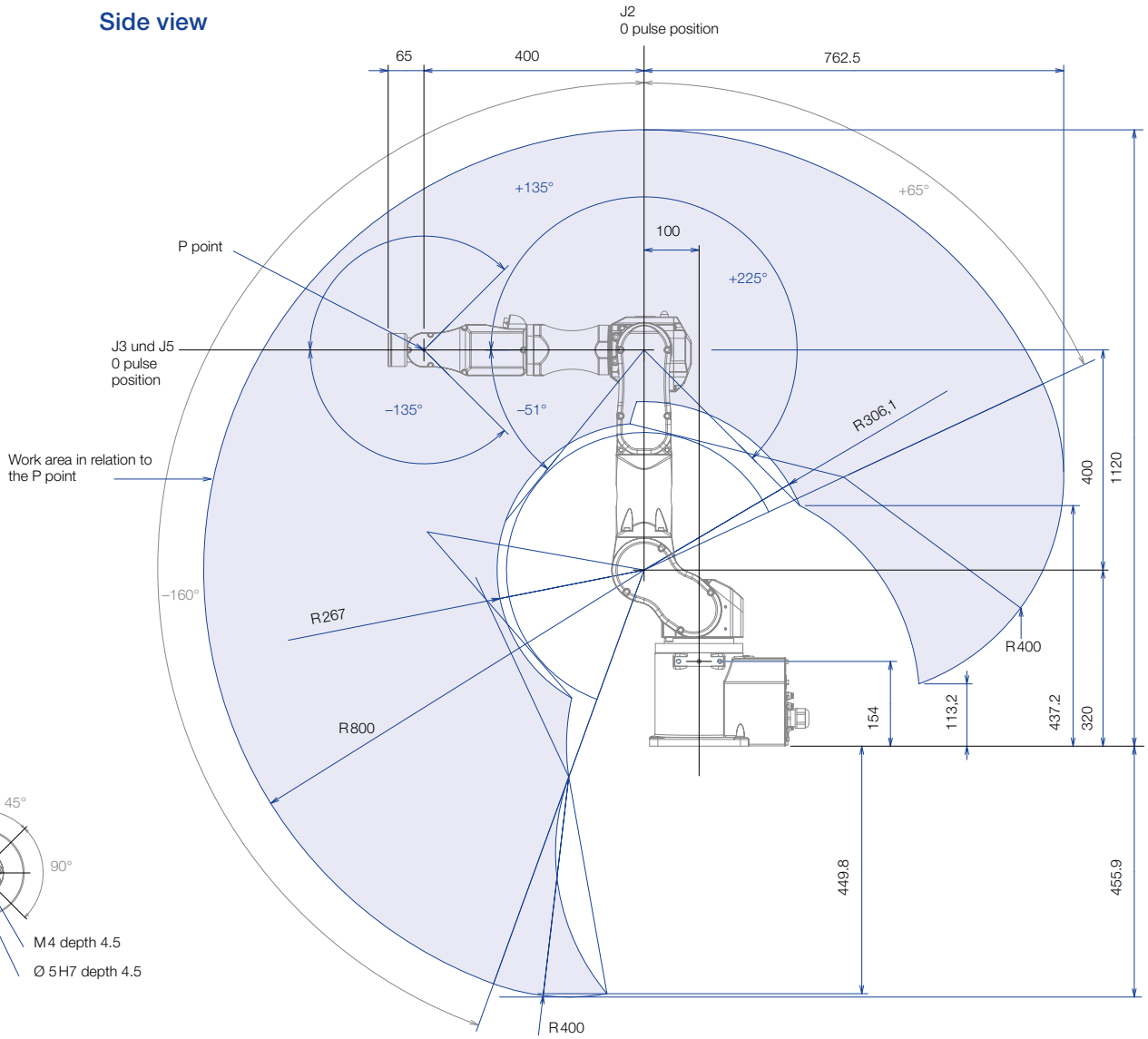

Flange

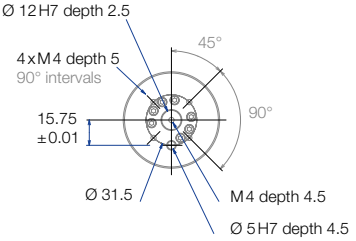

Front view

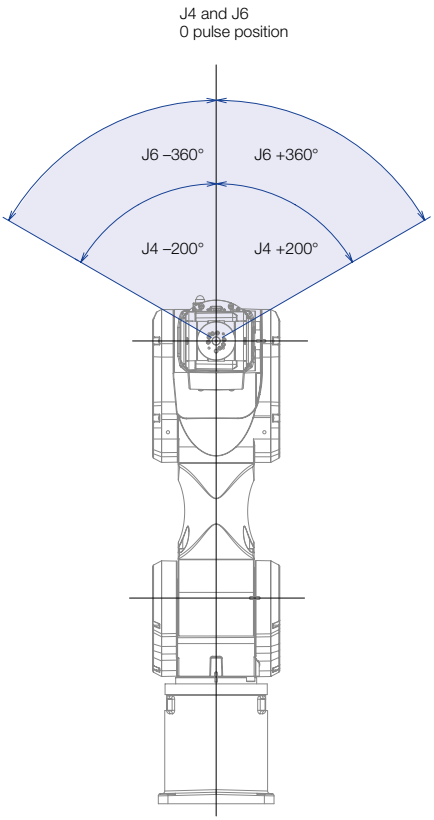

Top view

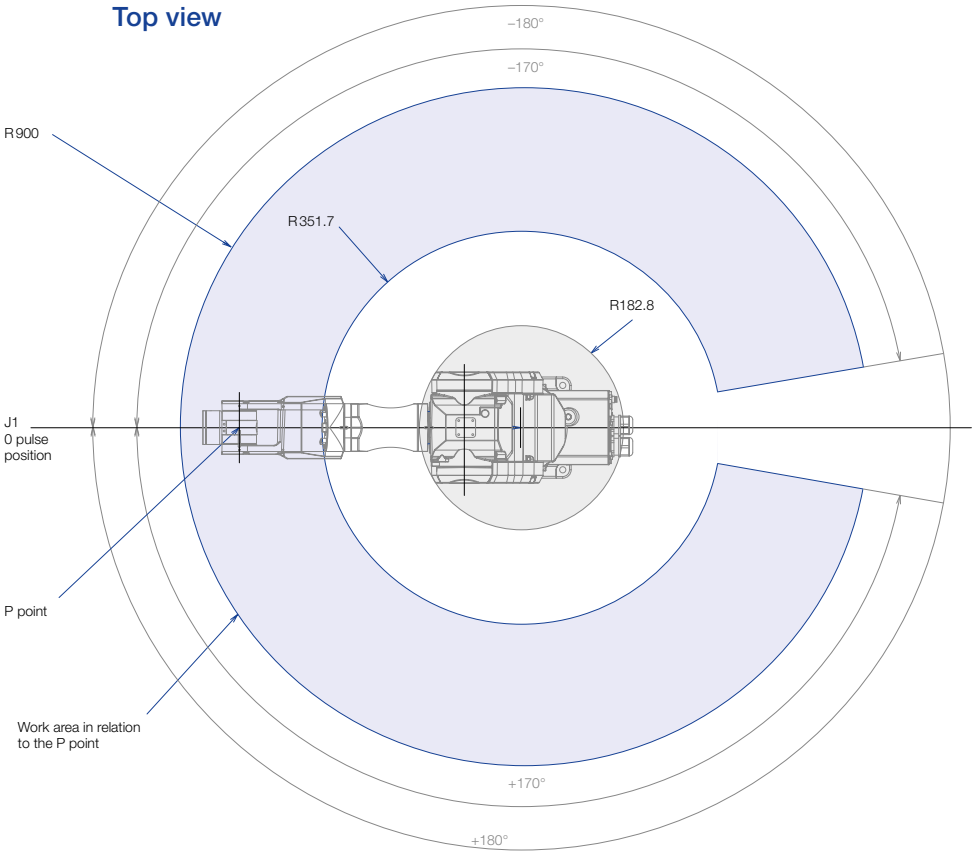

Epson ProSix C8

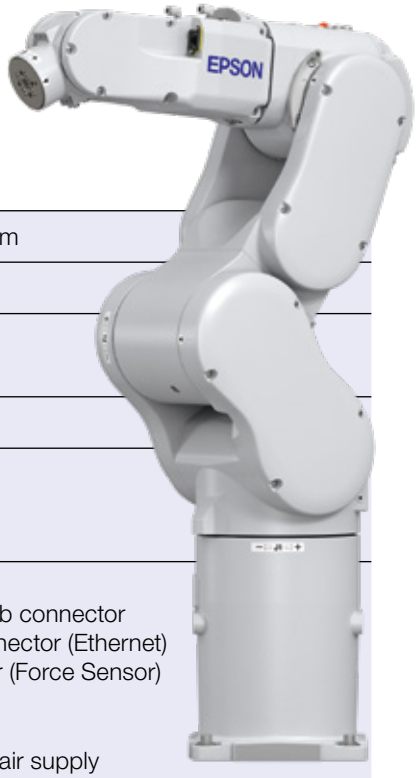

	C8-A701S
Design	Vertical articulated arm
Load capacity	8 kg
Range	P point* 710mm max. 790mm
Repeatability	+/−0.02mm
Permissible moment of inertia	J4 0.47 kg * m^2 J5 0.47 kg * m^2 J6 0.15 kg * m^2
User cabling	**Electrical** Connection for 1 x 15-pin D-Sub connector Connection for 1 x 8-pin RJ45-connector (Ethernet) Connection for 1 x 8-pin connector (Force Sensor) **Pneumatic** Connectors for compressed air supply 2 x Ø 6mm
Weight	49 kg (IP67: 53kg)
Controllers	RC700-A, RC700DU-A
Installation	Floor/ceiling
Ambient condition	**Cleanroom class (option)** ISO3 & ESD **Protection class** IP 40 (standard)/IP67 (option)

J1 = Axis 1
J2 = Axis 2
J3 = Axis 3
J4 = Axis 4
J5 = Axis 5
J6 = Axis 6

* **P point:** Intersection point of rotation centres of axes 4, 5 and 6

Package

Epson robots and controller

Epson RC+ program CD including simulation software

x2 mounting bracket sets for the robot controller

3m power and signal cable

3m power cable for the robot controller

Emergency stop plug

Plug for standard inputs/outputs

Plug set for user cabling

x2 air connection sets
(each with 2x straight and 2x 90° angled)

CD manuals

Installation/safety manual

Manipulator options

Extended power and signal cable (5m / 10m / 20m)

Brake release unit

Installation

The Epson ProSix C8, ProSix C8L and ProSix C8XL six-axis robots have flexible installation options, including floor and ceiling installation, which suit a wide range of applications.

Side view

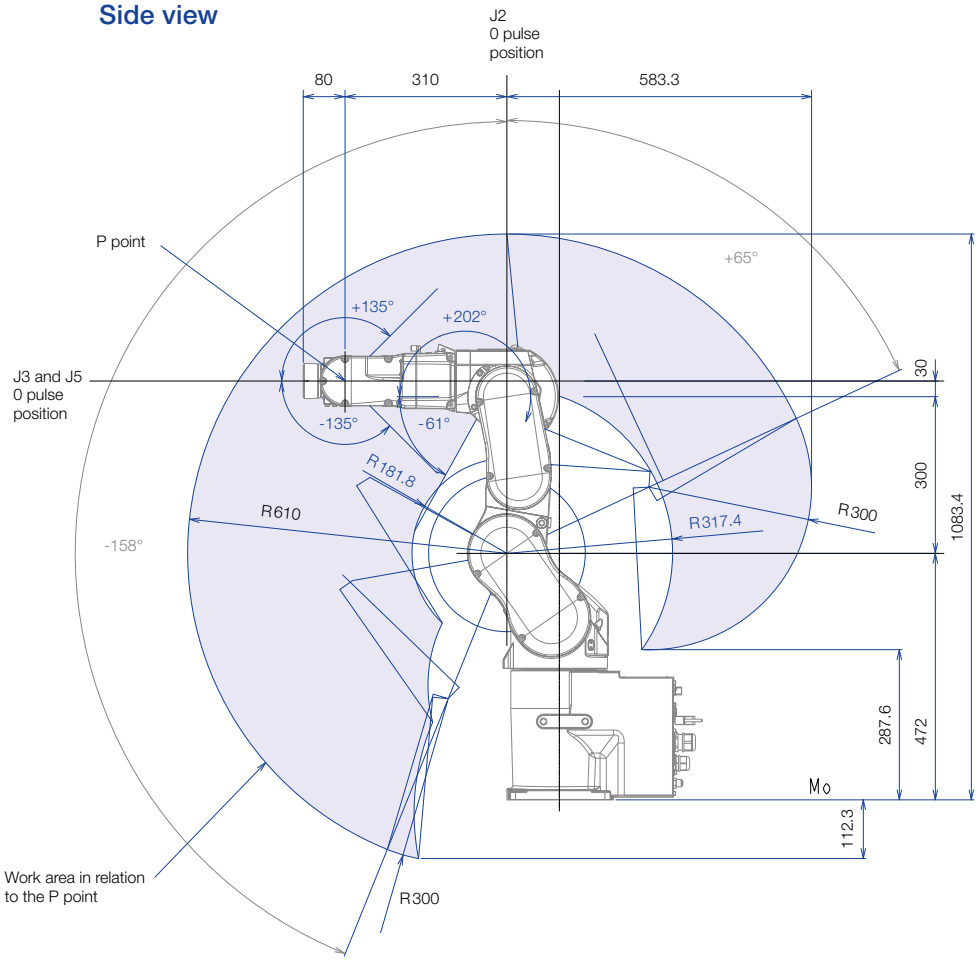

Flange

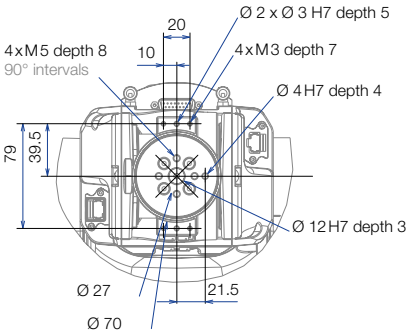

Front view

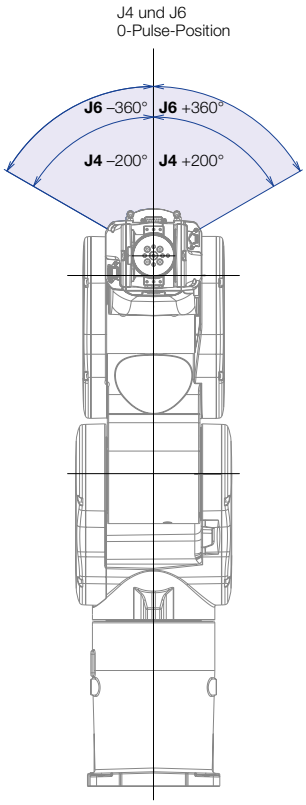

Top view

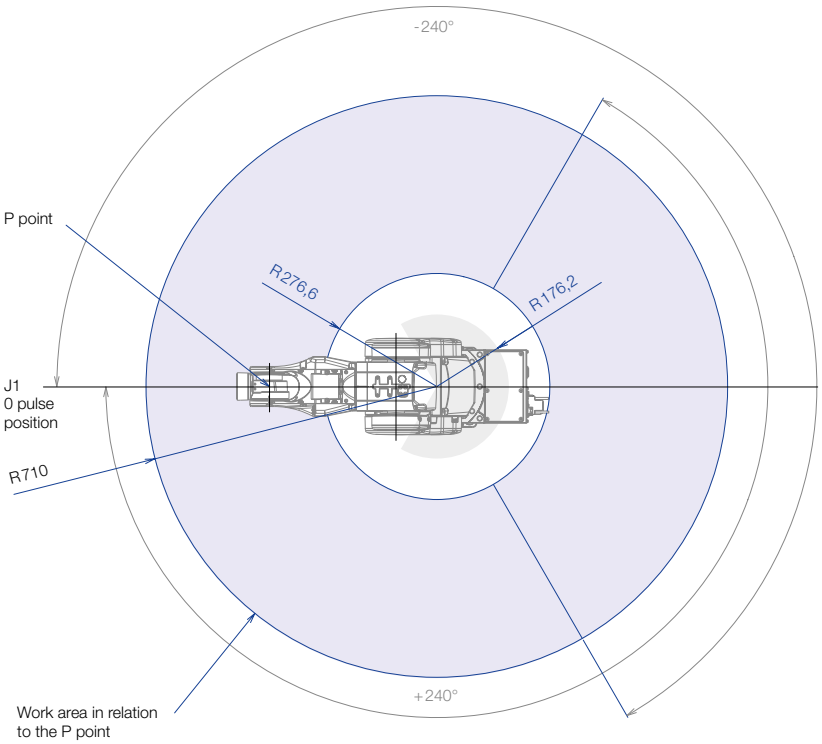

Epson ProSix C8L

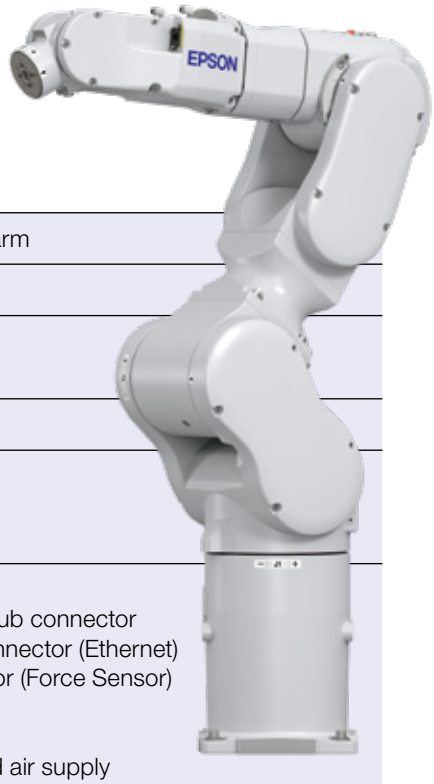

	C8-A901S
Design	Vertical articulated arm
Load capacity	8 kg
Range	P point* 900mm max. 980mm
Repeatability	+/−0,03mm
Permissible moment of inertia	J4 0.47 kg * m^2 J5 0.47 kg * m^2 J6 0.15 kg * m^2
User cabling	**Electrical** Connection for 1 x 15-pin D-Sub connector Connection for 1 x 8-pin RJ45-connector (Ethernet) Connection for 1 x 8-pin connector (Force Sensor) **Pneumatic** Connectors for compressed air supply 2 x Ø 6mm
Weight	52 kg (IP67: 56 kg)
Controllers	RC700-A, RC700DU-A
Installation	Floor/ceiling
Ambient condition	**Cleanroom class (option)** ISO3 & ESD **Protection class** IP40 (standard)/IP67 (option)

J1 = Axis 1
J2 = Axis 2
J3 = Axis 3
J4 = Axis 4
J5 = Axis 5
J6 = Axis 6

* **P point:** Intersection point of rotation centres of axes 4, 5 and 6

Package

Epson robots and controller

Epson RC+ program CD including simulation software

2x mounting bracket sets for the robot controller

3m motor and signal cable

3m motor cable for the robot controller

Emergency stop plug

Plug for standard inputs/outputs

Plug set for user cabling

2x air connection sets
(each with 2x straight and 2x 90° angled)

CD manuals

Manipulator options

Extended power and signal cable (5m / 10m / 20m)

Brake release unit

Installation

The Epson ProSix C8, ProSix C8L and ProSix C8XL six-axis robots have flexible installation options, including floor and ceiling installation, which suit a wide range of applications.

Side view

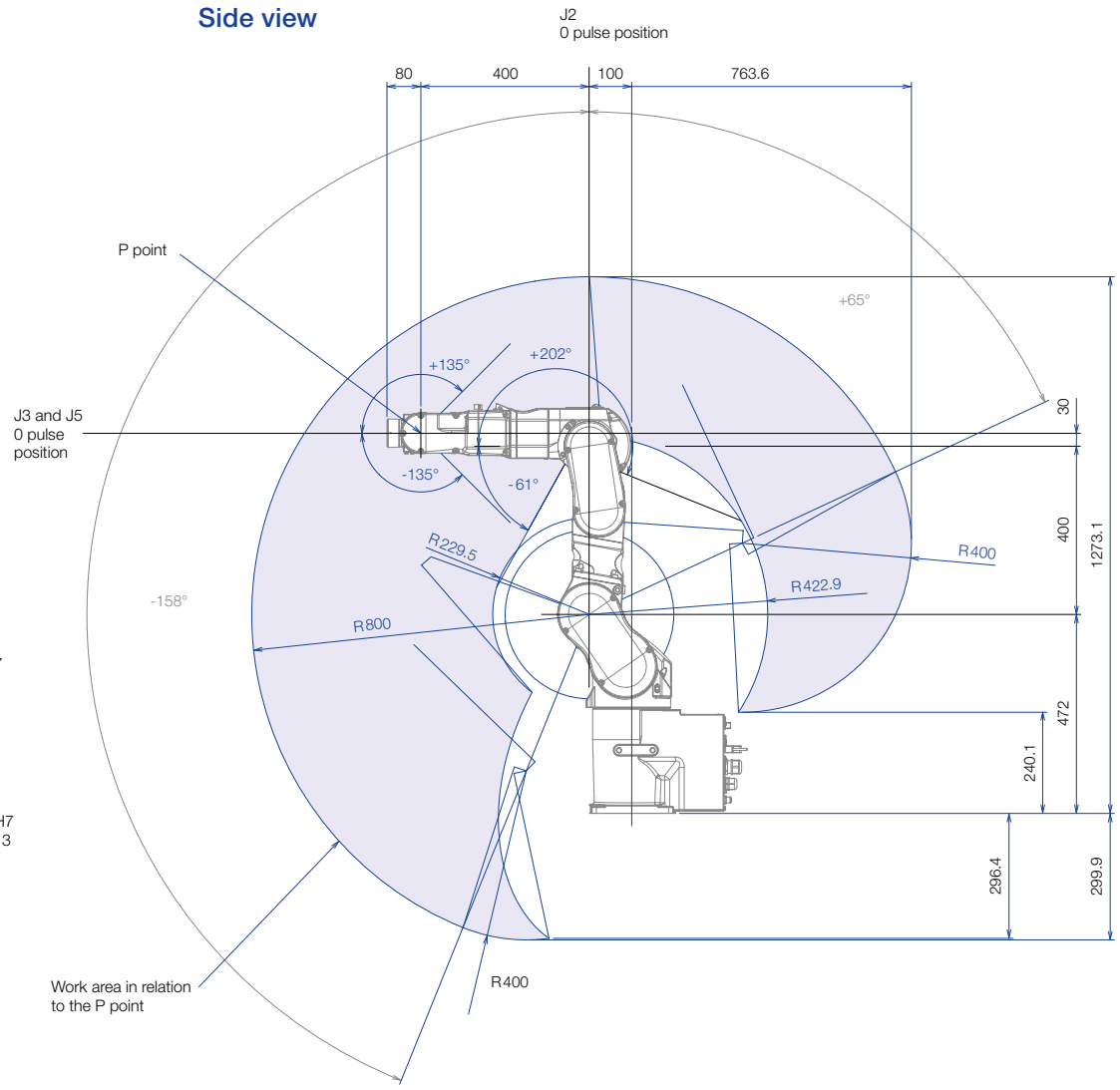

Flange

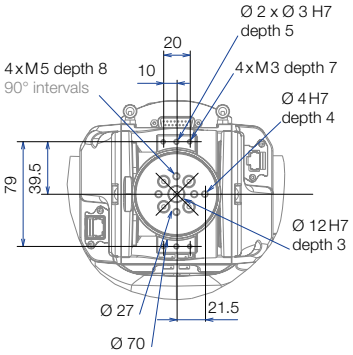

Front view

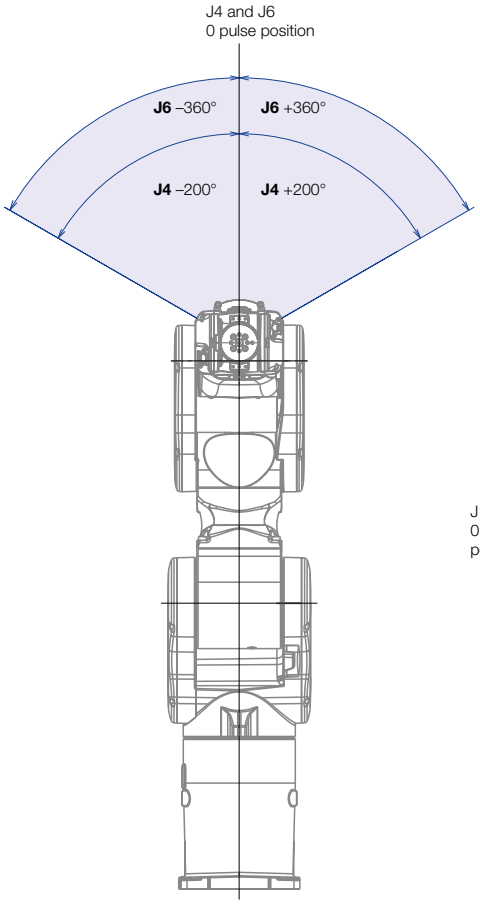

Top view

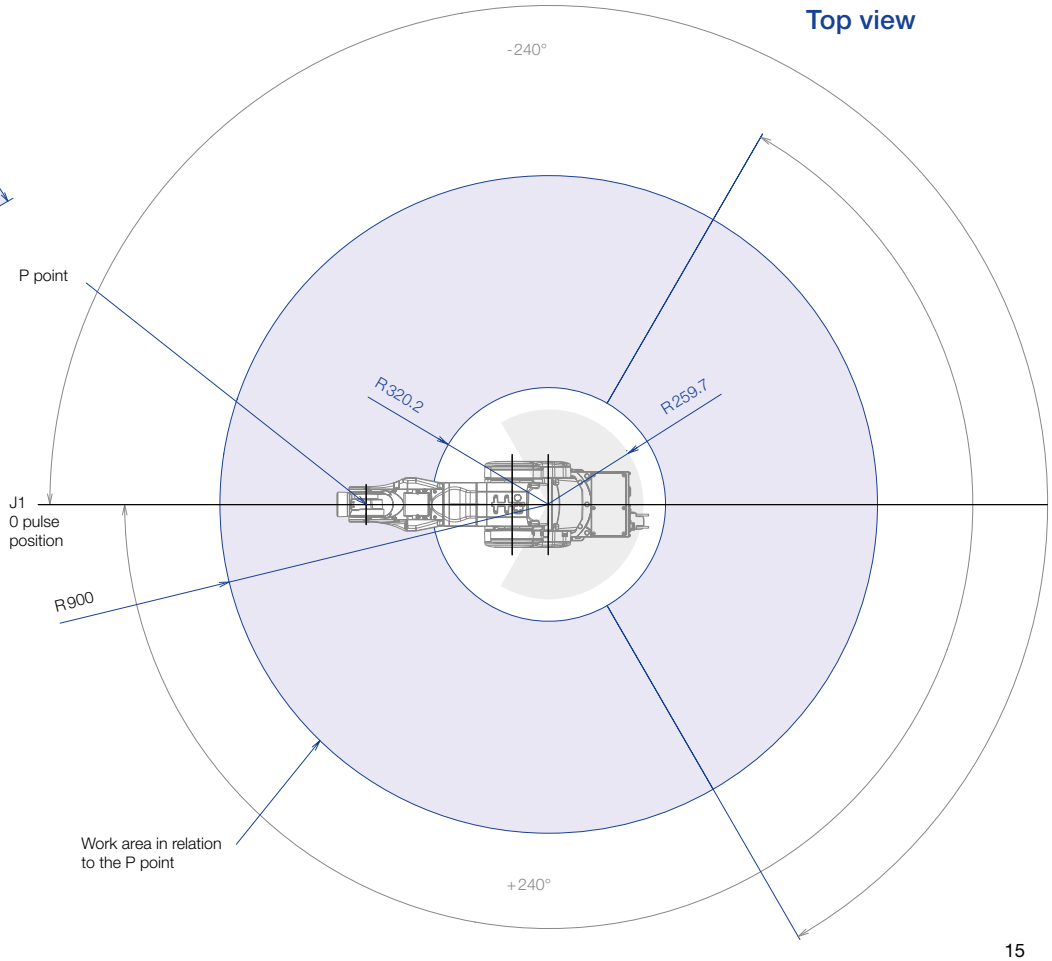

Epson ProSix C8XL

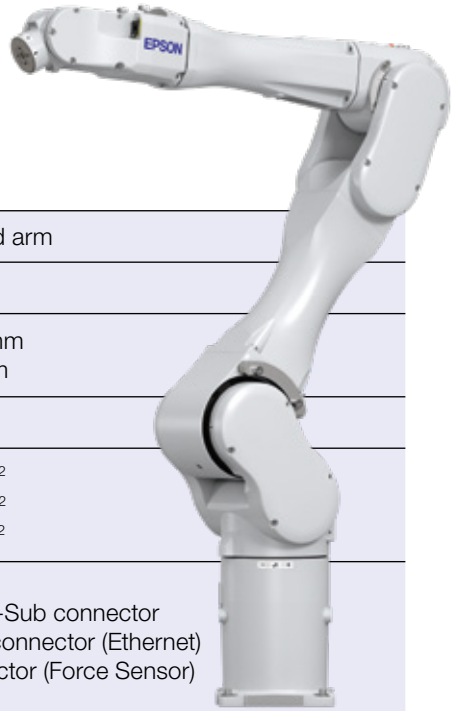

	C8-A1401S
Design	Vertical articulated arm
Load capacity	8 kg
Range	P point* 1400mm max. 1480mm
Repeatability	+/−0.05mm
Permissible moment of inertia	J4 0.47 kg * m^2 J5 0.47 kg * m^2 J6 0.15 kg * m^2
User cabling	**Electrical** Connection for 1 x 15-pin D-Sub connector Connection for 1 x 8-pin RJ45-connector (Ethernet) Connection for 1 x 8-pin connector (Force Sensor) **Pneumatic** Connectors for compressed air supply 2 x Ø 6mm
Weight	62 kg (IP67: 66 kg)
Controllers	RC700-A, RC700DU-A
Installation	Floor/ceiling
Ambient condition	**Cleanroom class (option)** ISO3 & ESD **Protection class** IP40 (standard)/IP67 (option)

J1 = Axis 1
J2 = Axis 2
J3 = Axis 3
J4 = Axis 4
J5 = Axis 5
J6 = Axis 6

* **P point:** Intersection point of rotation centres of axes 4, 5 and 6

Package

Epson robots and controller

Epson RC+ program CD including simulation software

2 mounting bracket sets for the robot controller

3m power and signal cable

3m power cable for the robot controller

Emergency stop plug

Plug for standard inputs/outputs

Plug set for user cabling

2 air connection sets
(each with 2 x straight and 2 x 90° angled)

CD manuals

Installation/safety manual

Manipulator options

Extended power and signal cable (5m/10m/20m)

Brake release unit

Installation

The Epson ProSix C8, ProSix C8L and ProSix C8XL six-axis robots have flexible installation options, including floor and ceiling installation, which suit a wide range of applications.

Flange

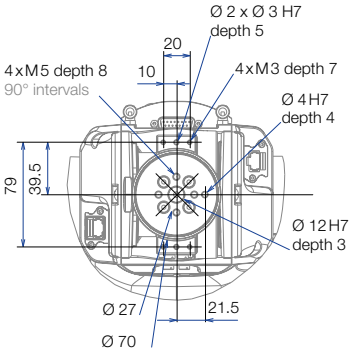

Side view

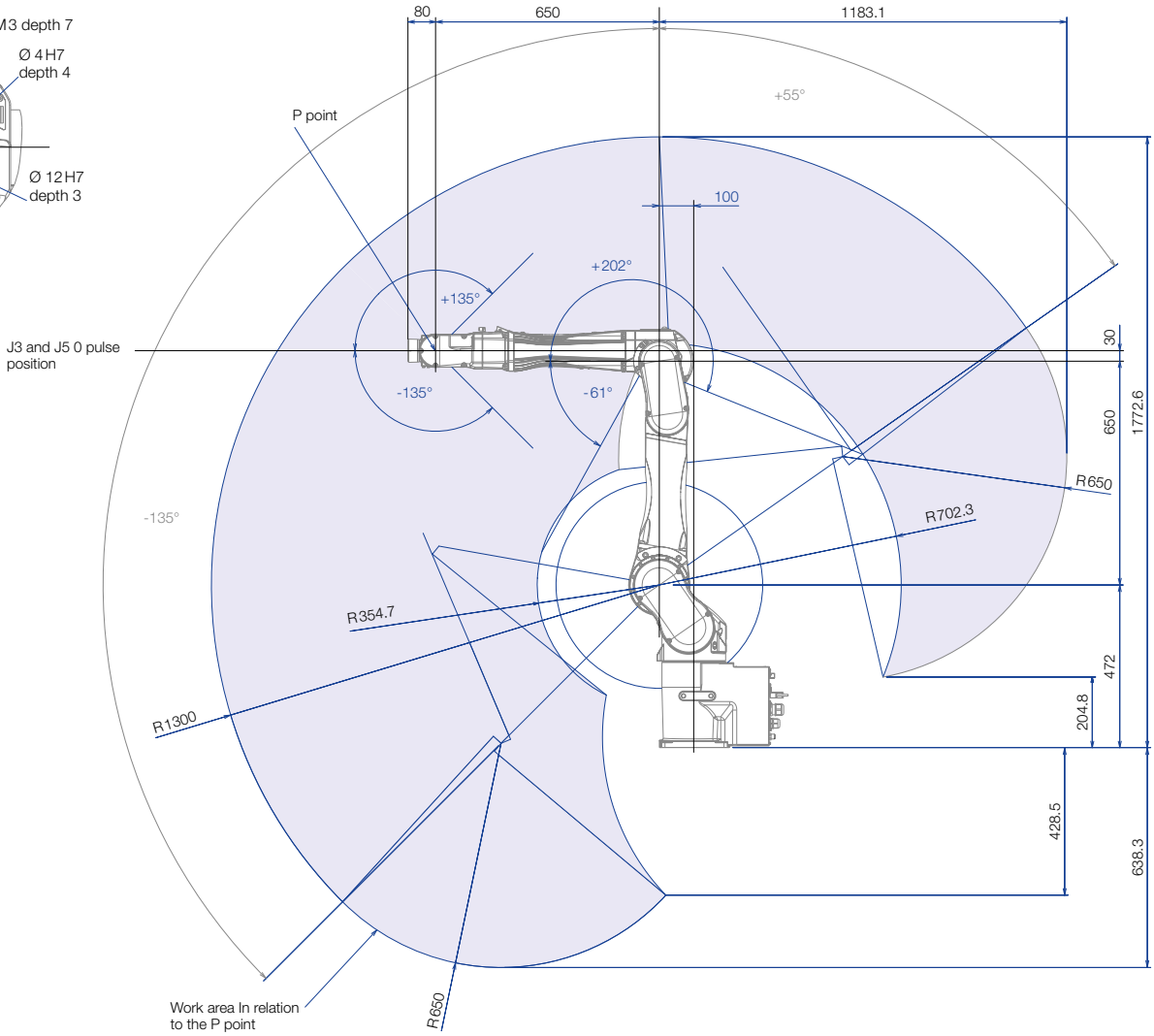

Front view

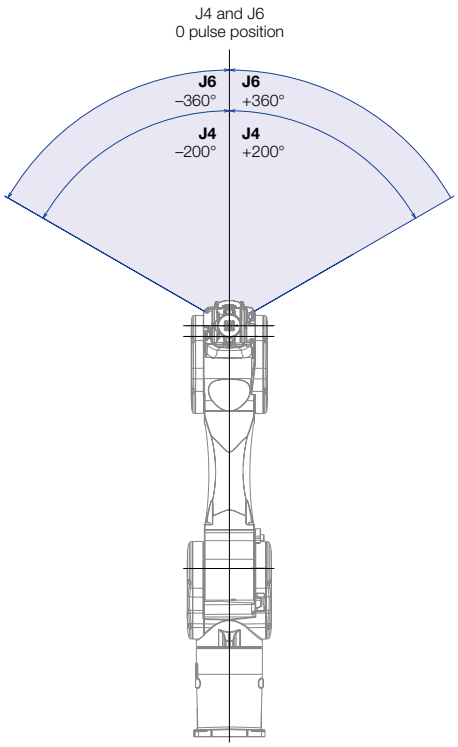

Top view

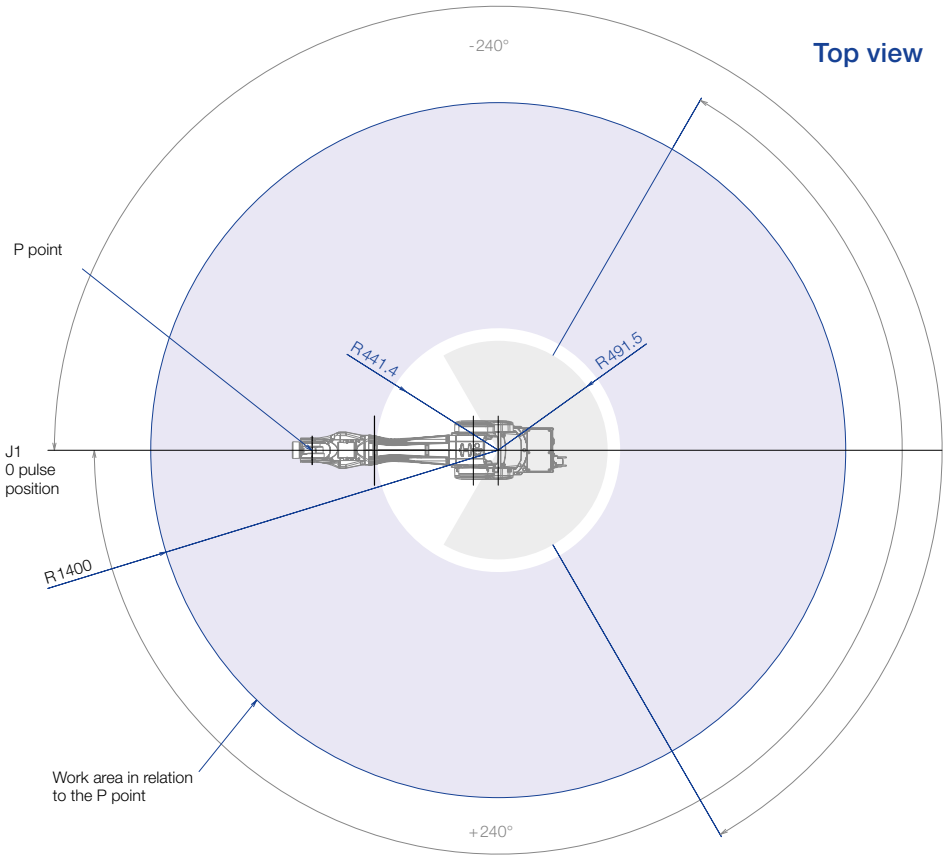

Epson ProSix C12XL

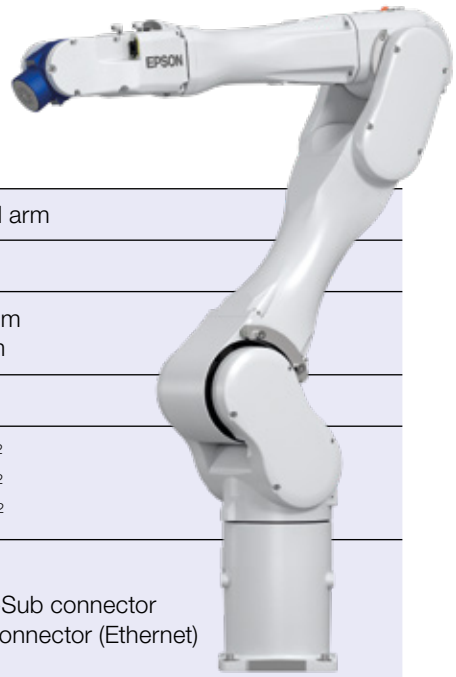

	C12-A1401**
Design	Vertical articulated arm
Load capacity	12 kg
Range	P point* 1400mm max. 1480mm
Repeatability	+/−0.05mm
Permissible moment of inertia	J4 0.70 kg * m^2 J5 0.70 kg * m^2 J6 0.20 kg * m^2
User cabling	**Electrical** Connection for 1 x 15-pin D-Sub connector Connection for 1 x 8-pin RJ45-connector (Ethernet) **Pneumatic** Connectors for compressed air supply 2 x Ø 6mm
Weight	63 kg
Controllers	RC700-A, RC700DU-A
Installation	Floor
Ambient condition	**Cleanroom class (option)** ISO4 & ESD **Protection class** IP40 (standard)

J1 = Axis 1
J2 = Axis 2
J3 = Axis 3
J4 = Axis 4
J5 = Axis 5
J6 = Axis 6

* **P point:** Intersection point of rotation centres of axes 4, 5 and 6

Package

Epson robots and controller

Epson RC+ program CD including simulation software

2 mounting bracket sets for the robot controller

3m power and signal cable

3m power cable for the robot controller

Emergency stop plug

Plug for standard inputs/outputs

Plug set for user cabling

2 air connection sets
(each with 2 x straight and 2 x 90° angled)

CD manuals

Installation/safety manual

Manipulator options

Extended power and signal cable (5m/10m/20m)

Brake release unit

Installation

The Epson ProSix C12 robots are designed for floor installation.

Flange

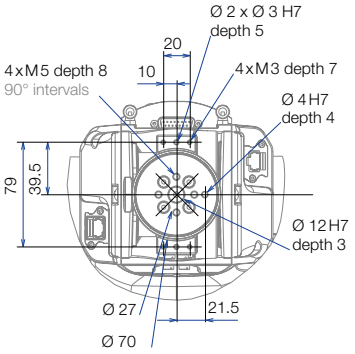

Side view

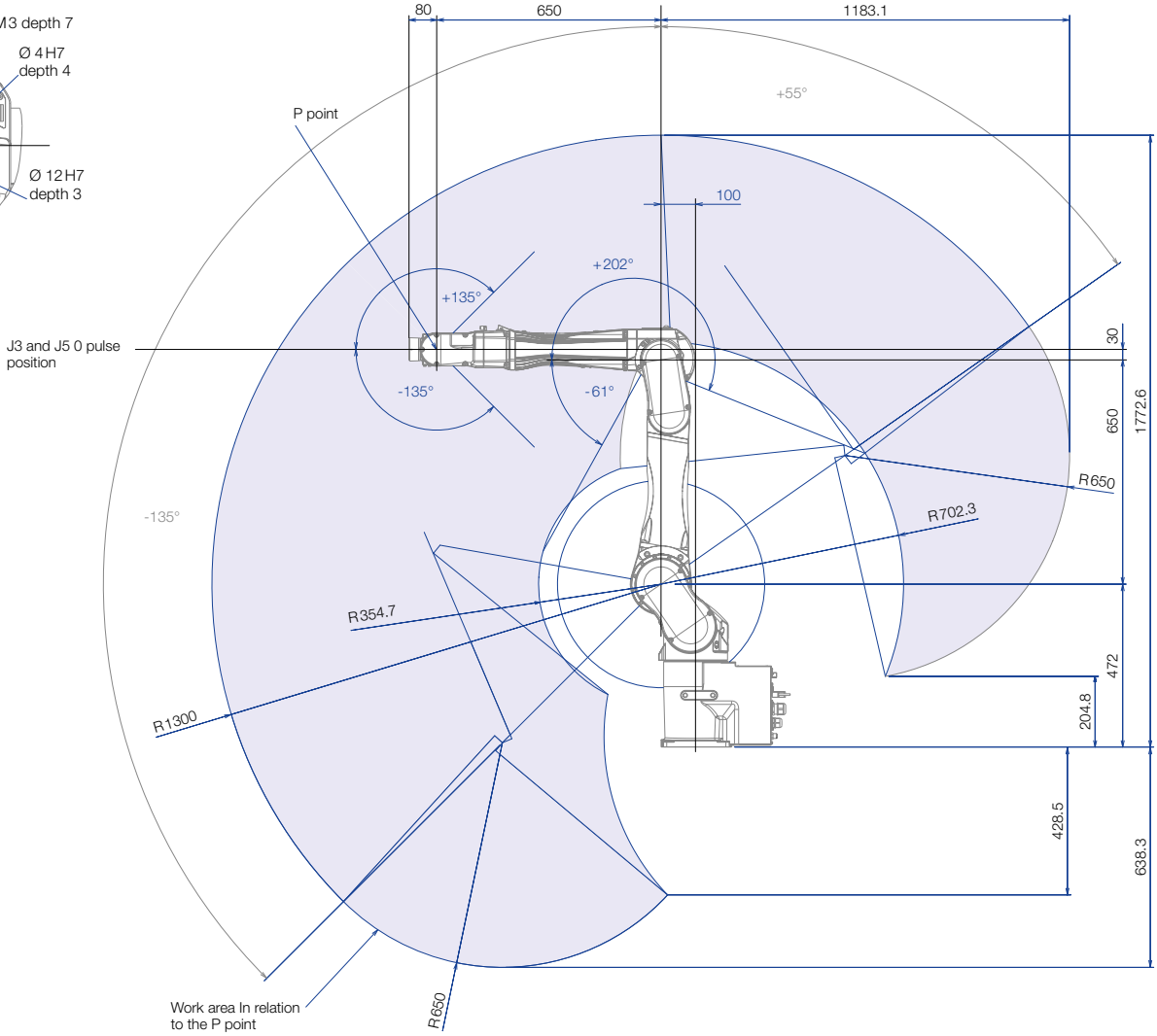

Front view

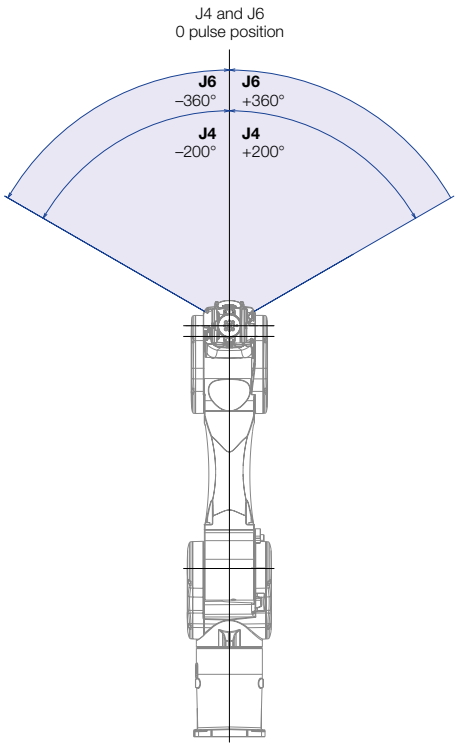

Top view

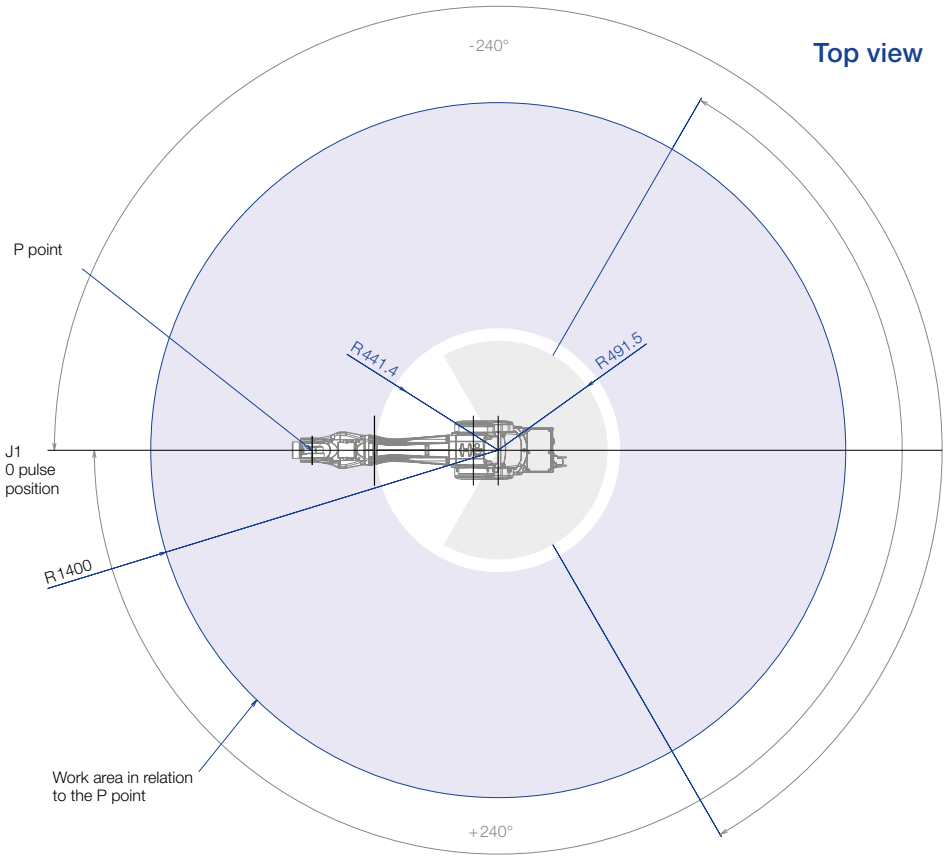

Easily manage and stay in control of your whole robot fleet

Epson's Robot Management System (RMS) helps you configure and monitor up to 200 robot controllers from one central location. Whether via local network or intranet, you can track and save the operating status, carry out firmware updates simultaneously for all controllers and display the lifetime values of the motor, gearbox and toothed belt of the robots.

With RMS, you have your Epson robot fleet under control and increase productivity in your manufacturing and quality inspection processes.

Good to know: You can use the management system free of charge for up to three Epson robot controllers.

Epson SCARA LS-B-Series
Payload: 3 to 20 kg
Reach: 400 to 1.000 mm

Epson SCARA G-Series
Payload: 1 to 20 kg
Reach: 175 to 1.000 mm

Epson SCARA RS-Series
Payload: 3 to 4 kg
Reach: 350/550 mm

Epson ProSix-C-Series
Payload: 4 to 12 kg
Reach: 600 to 1.400 mm

Epson ProSix-N-Series
Payload: 2,5 to 6 kg
Reach: 450 to 1.000 mm

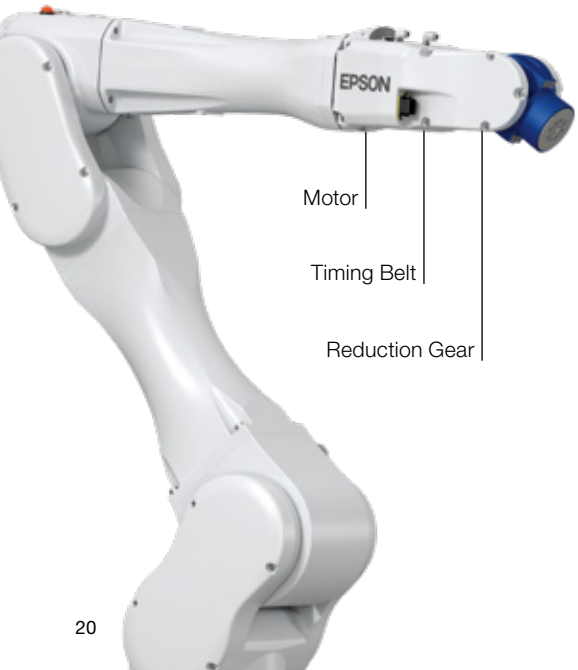

Robot status monitoring

Based on the lifetime values of various components of the robots connected to the network, you can create a solid maintenance plan - and avoid unplanned downtime.

Lifetime prediction for:

- Motor
- Timing belt
- Reduction Gear

Controller Monitoring

Check the overall operating status or the status of individual components of multiple Epson robots, including:

- Aggregated status display for each group
- Event protocol of errors or warnings that have occurred in the controller
- Clear overview of the scheduled backups with version management

Save costs and time

- Almost 100 % availability of your robot fleet, no unplanned maintenance or downtime
- Time-saving single-spot monitoring (PC or tablet) for up to up to 200 robot controllers
- More security through regular backups
- Precise and solid maintenance schedule thanks to Lifetime Prediction

Configuration. Management. Monitoring.

Whether PC or tablet - via the dashboard with graphical elements or list display, the management of your Epson robot fleet is convenient and simple.

Epson SCARA T-Series
Payload: 3 to 6 kg
Reach: 400/600 mm

Epson ProSix-VT6-Series
Payload: 6 kg
Reach: 920 mm

Ethernet-Switch

Controller configuration

For multiple controllers on the network, you can configure controller environment settings in a batch, time adjustment operation programs and settings, firmware updates, etc.

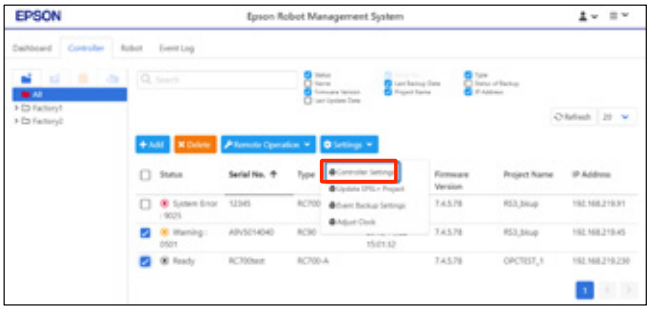

- Convenient and fast download of firmware updates
- Problem-free restoration of robot programming data and settings thanks to backup copy
- Version comparison for error analysis

Simulation of robot cells

Good preparation is everything. Plan and visualise all procedures in your production, validate your program offline initially and carry out troubleshooting and editing work easily from your desk. With the Epson RC+ Simulator – included in the software package – you save time and money through all phases of your project.

Phase 1
Design

Plan your robot cell at full size in advance and work out the expected cycle time for your application to check feasibility before a single part for the system has been made. Plan future system expansions in the simulation system to keep downtime to a minimum.

Phase 2
Integration

Completing the program validation process before the robots are delivered enables you to create programs at the same time, with the system capable of displaying and evaluating even complex motions. Collision risks are identified and equipment damage is prevented.

Phase 3
Operation and maintenance

Troubleshoot and modify programs from your desk. Use the 3D layout to visualise collision detection, reachability checks and robot motions.

Even simpler designs using the CAD-to-Point function

The CAD-to-Point function allows CAD data to be converted into robot points.

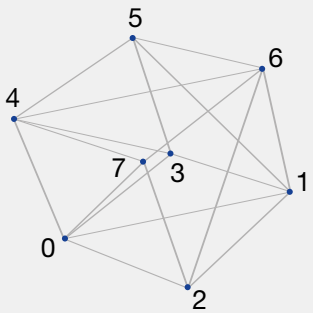

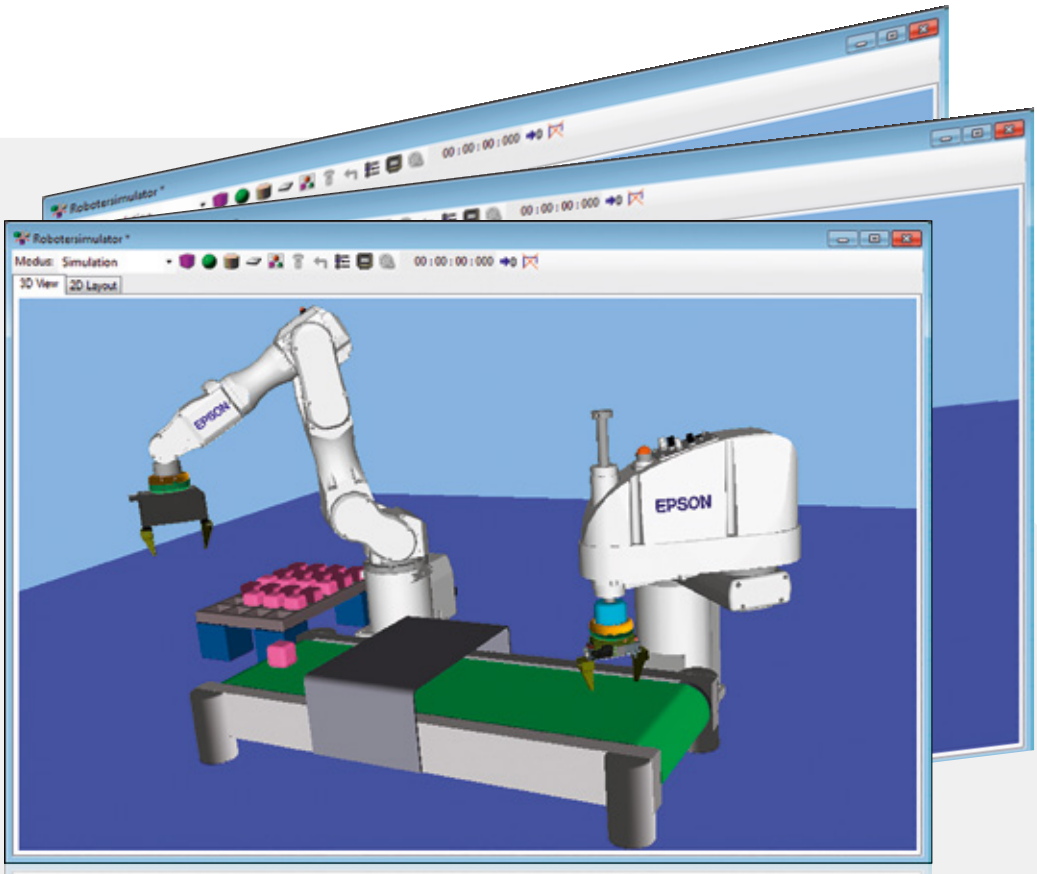

Pioneering global robotic solutions for intelligent automation

Epson Robotic Solutions is one of the leading suppliers of high tech robot systems that are renowned worldwide for their reliability. The product range includes six-axis robots, SCARA robots, the SCARA entry-level LS and T models, the special Epson-developed Spider and N2 robots types, as well as the pioneering Dual Arm robot. Added to this are image processing controls and the Epson Force Sensor for force-controlled applications.

This gives Epson Robotic Solutions one of the most comprehensive ranges of high-precision industrial robots in the world, making them a technological pioneer for intelligently controlled automation processes.

Technological pioneer

1982
Epson SCARA robots freely available in Japan for the first time

1986
First class 1 cleanroom robot

1997
First PC-based controller

2008
Inventor of the right or left arm-optimised G3 SCARA robot

2009
Inventor of the spider – a unique SCARA robot with no dead zones

2013
First application of Epson QMEMS® sensors in robotics, reducing six-axis kinematics vibrations

2014
Epson Compact Vision CV2: Epson's own ultra-fast image processing computer

2016
Epson N2 series: World's first 6-axis robot with folding arm - extremely compact and space-saving

2017
Epson Dual Arm robot with an arm geometry inspired by human physiology, as well as integrated sensors such as cameras, force sensors, and accelerometers

2019
Market launch of entry-level robot models T series and VT series with integrated controller

Pre and after-sales support

Feasibility studies for maximum planning and project security

Support for planning and implementation

Introductory seminars, programming/maintenance courses, operator training

Inspection and individual maintenance concepts

Hotline service, on-site repair service

Central spare part stocking

Epson Industrial Solutions Center – find your solution

Epson Industrial Solutions Center

Experience all our Epson robots in action. Build, simulate and improve your automation application in a workshop cell, with help from our experts. The cell can be controlled and networked using all conventional fieldbus systems. In addition, we can supply you with modern peripherals such as a vision and conveyor tracking system.

Make an appointment

Call us on
+49 2159 538 1800

or send an email to
info.rs@epson.de

Epson Deutschland GmbH
Robotics Solutions Division
Otto-Hahn-Strasse 4
40670 Meerbusch

Phone: **+49 2159 5381800**
Fax: **+49 2159 5383170**
E-mail: **info.rs@epson.de**
www.epson.de/robots

Epson America Inc.
www.epsonrobots.com

Seiko Epson Corp
http://global.epson.com/products/robots/

Epson China Co, Ltd.
www.epson.com.cn/robots/

A12192_ProSix series_1EN-GB_05/21

For more information please contact:

Home users: 0343 90 37766
Business users*: 0871 42 37766
Republic of Ireland: 01 436 7742

Or visit us at www.epson.co.uk/contactus

* 10p per minute plus network extras.

EpsonUK
@EpsonUK
@EpsonUK
epson-uk-ltd

EPSON®